FOOD WASTE STRAINER

FWS600 - FITTING INSTRUCTIONS

manufactured by MECHLINE

Thank you for purchasing the Mechline Food Waste Strainer FWS600.

- **MADE FROM DURABLE 1mm, 304 STAINLESS STEEL, WITH REMOVABLE FOOD WASTE BASKET.**
- **THE SET-UP TAKES FIVE MINUTES FOR EITHER LEFT, OR RIGHT HANDED SINK BOWLS.**
- **DESIGNED FOR SINKS OF 580-610 mm LENGTH x 430-460 mm WIDTH.**
- **UPSTAND STRAINER, IF PURCHASED FROM MECHLINE, WILL FIT A STANDARD 1 ½" (40mm) WASTE**

IMPORTANT NOTES:

- **FOR STRAINER TO WORK EFFICIENTLY, AN UPSTAND STRAINER MUST BE USED.**
- **THE UPSTAND STRAINER MUST BE LOWER THAN THE SINK'S BRIM.**
- **IT IS IMPERATIVE THE FOOD WASTE STRAINER SITS IN THE BOTTOM OF THE SINK.**
- **THE FOOD WASTE STRAINER MUST BE INSTALLED IN COMPLIANCE WITH THE SUPPLIED INSTRUCTIONS.**
- **WE RECOMMEND THE FOOD WASTE STRAINER IS CLEANED IN THE DISHWASHER AT THE END OF EACH SHIFT.**
- **TAKE CARE BEFORE AND DURING INSTALLATION AND WHEN REMOVING THE FOOD WASTE STRAINER FOR CLEANING, MOVING METAL PARTS INVOLVED!**

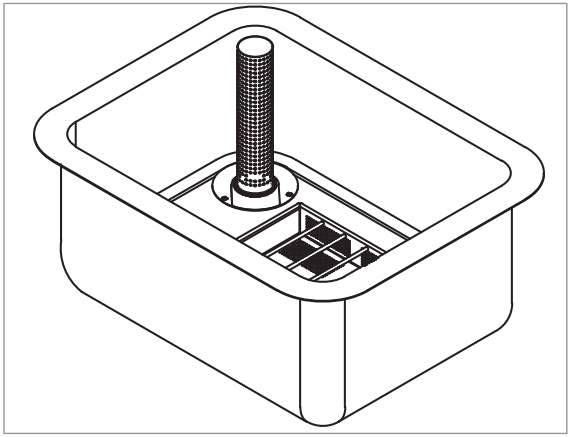

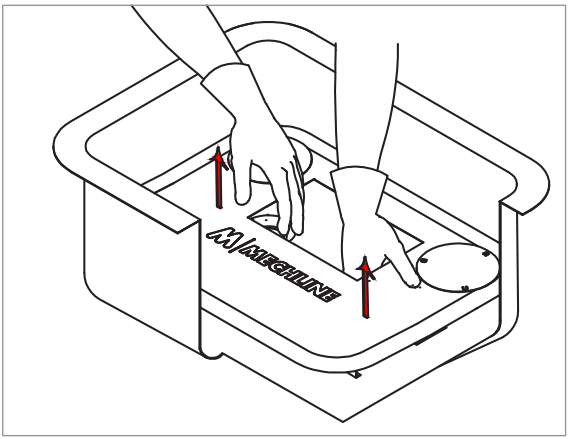

continued...

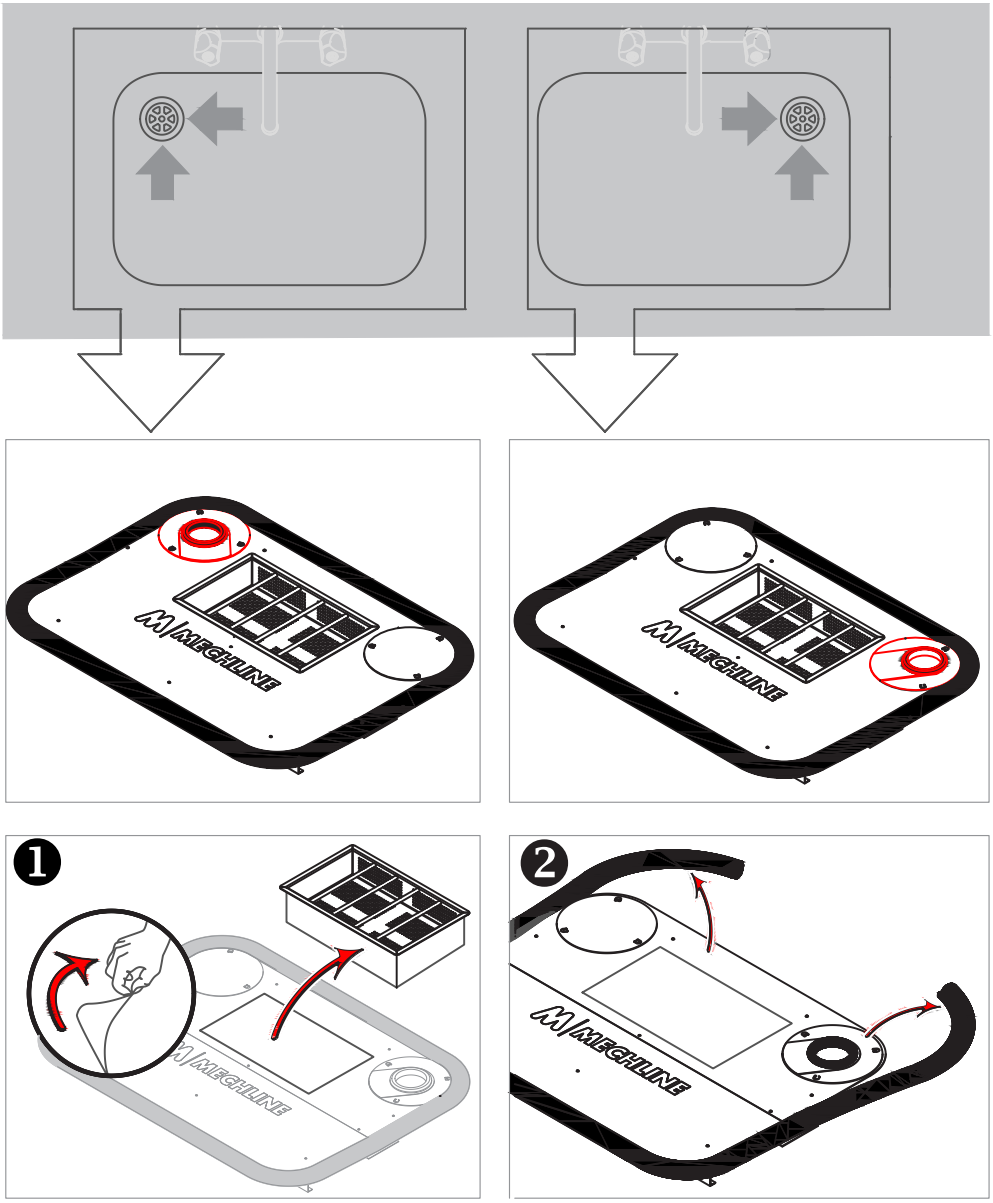
1
2

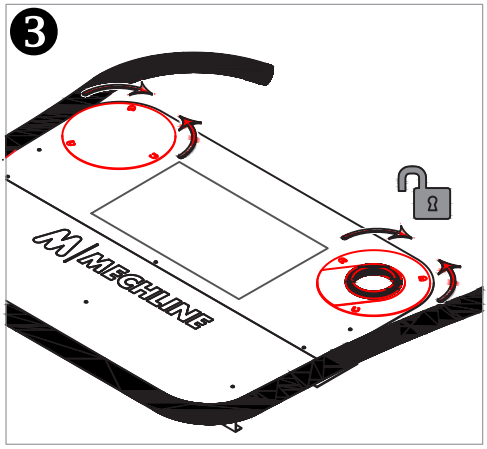

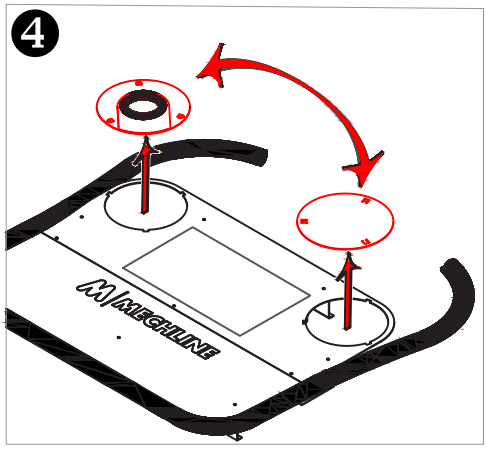

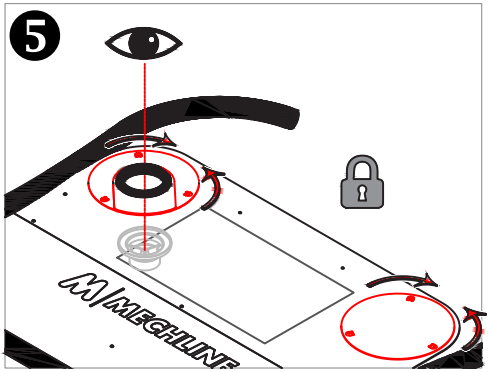

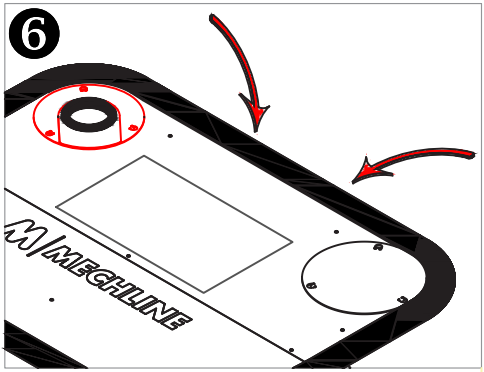

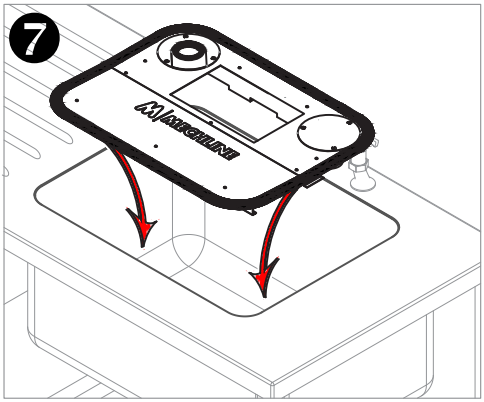

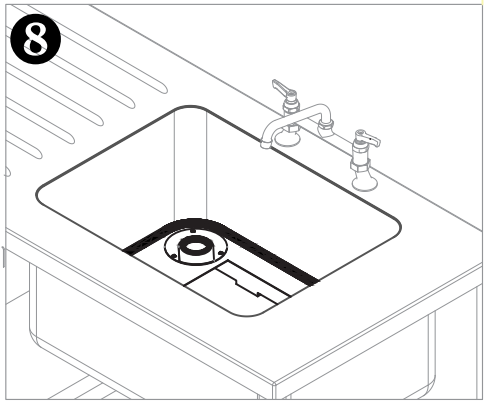

continued...

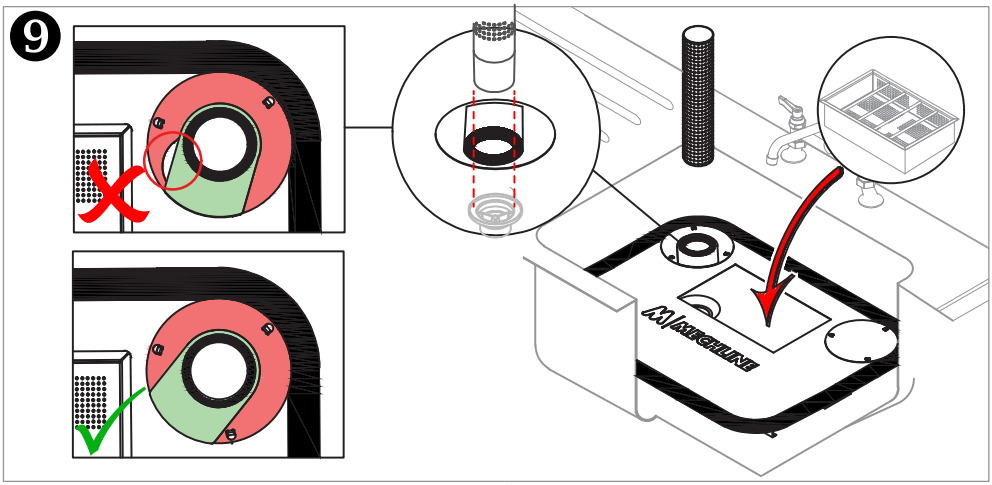

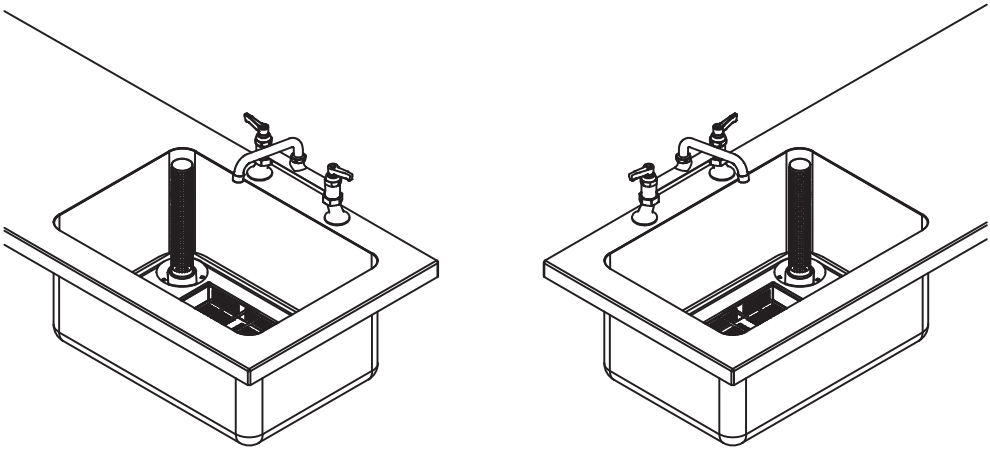

©2019 All rights reserved. All material on these pages, including and without limitation text, logos, icons, photographs and all other artwork, is cop right material of Mechline Developments Ltd, unless otherwise stated. Commercial use of this material may only be made with the express, prior, written permission of Mechline. This includes material provided by any third party, including material obtained through links to other sites from Mechline's pages or its affiliates and commercial associates. Material and information included are correct at time of print. Intending buyers and users must satisfy themselves as to the suitability and safety of the products for their particular purposes and duties. Dimensions shown in mm unless otherwise stated. Product accreditation may not apply to all products in the relevant range. Please contact Mechline to confirm. Unless otherwise stated, all products carry a warranty of twelve (12) months against manufacturing defect or workmanship on parts with no inclusion for labour or site attendance. (FWS06)